Franke Triflow Tradition Tap Specifications

- **3 handled quarter turn mixer**
- **Provides Hot, Cold and Purified water from a single mixer**
- **Coded indices**
- **Dedicated handle and spout outlet for purified water**
- **Includes an integrated Filter System**
- **Exceptional Filtration capability to 0.2 micron**
- **Machined brass body**
- **Biflow spout**
- **Meets all certification approval requirements**
- **Attractive design**
- **Compatible with most Franke sinks**
- **Requires cut-out: ø35mm**
- **Fully guaranteed with nationwide servicing***

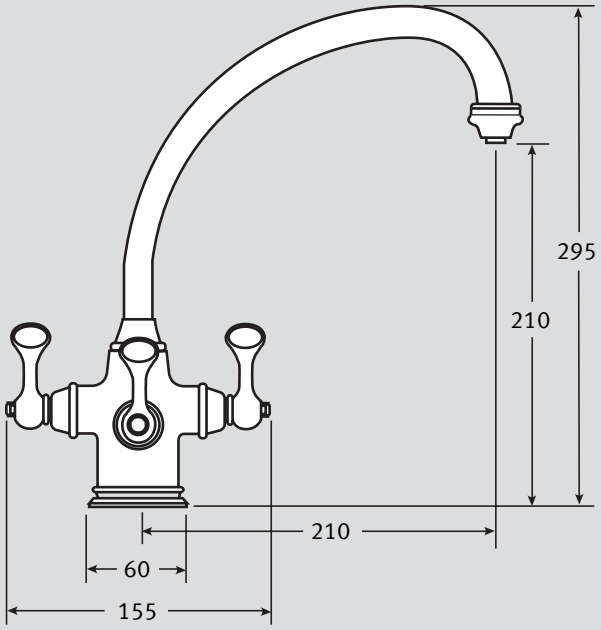

Material:	Solid brass machined body and tubular brass spout	
Type:	Quarter turn mixer	
Spout:	Biflow tubular spout with bayonet and screw fitting	
Tails:	Flexi tails	
Tap Height:	210 (overall tap height 295)	
Spout Reach:	210	
Handle Width:	155	
Colours:	Chrome, SilkSteel, Gold, Nickel or Nickel/Gold	
Maximum Water Pressure:	75 PSI (5 bar)	
Maximum Hot-Water Temperature:	70ºC	
Recommended hot water Temperature:	65ºC	
Guarantee:-	**Ceramic disc:** **Surface:**	5 year 1 year
Joints:	It is recommended that compression fittings are used to link the tap to the supply.	

Some taps may require bracing to avoid flexing of the sink ledge.

Tails:

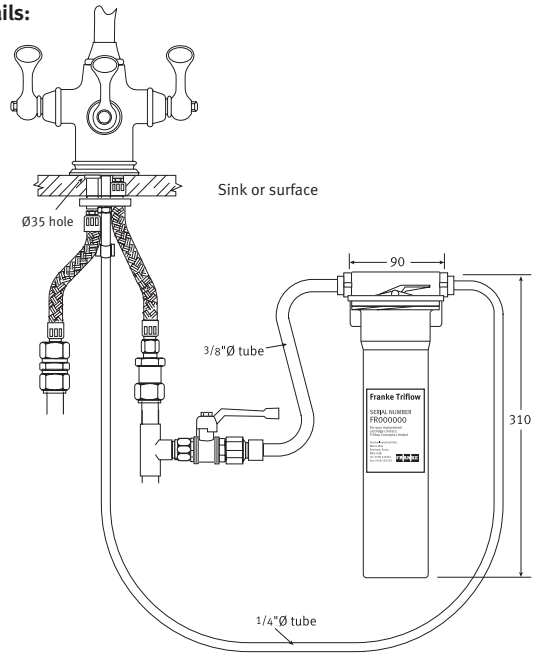

Valve Mechanism: (x3)

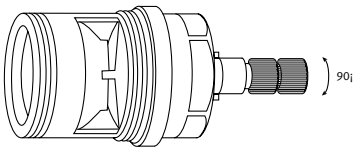

***Avilion: 01708 526361**

All Franke taps are designed to conform with Water Research Council requirements

NB. Ceramic disc taps in certain installations or where there is a low head of water (below 4 metres) may not provide adequate flow rates. You are advised to check with your supplier.

The Franke policy is one of continued improvement, and Franke reserve the right to alter models and specifications without notice.